LITE-ON SEMICONDUCTOR CORP.

LSP5526

2A 23V Synchronous Buck Converter

Features

- 2A Output Current
- Wide 4.5V to 23V Operating Input Range
- Integrated Power MOSFET Switches
- Output Adjustable from 0.925V to 18V
- Up to 96% Efficiency
- Programmable Soft-Start
- Stable with Low ESR Ceramic Output Capacitors
- Fixed 340KHZ Frequency
- Cycle-by-Cycle Over Current Protection
- Input Under Voltage Lockout
- Package： SOP-8L

General Description

The LSP5526 is a monolithic synchronous buck regulator. The device integrates 95mΩ MOSFETS that provide 2A continuous load current over a wide operating input voltage of 4.5V to 23V. Current mode control provides fast transient response and cycle-by-cycle current limit.

An adjustable soft-start prevents inrush current at turn on. In shutdown mode, the supply current drops below 1uA.

Applications

- Distributed Power Systems
- Networking Systems
- FPGA, DSP, ASIC Power Supplies
- Green Electronics/ Appliances
- Notebook Computers

Typical Application Circuit

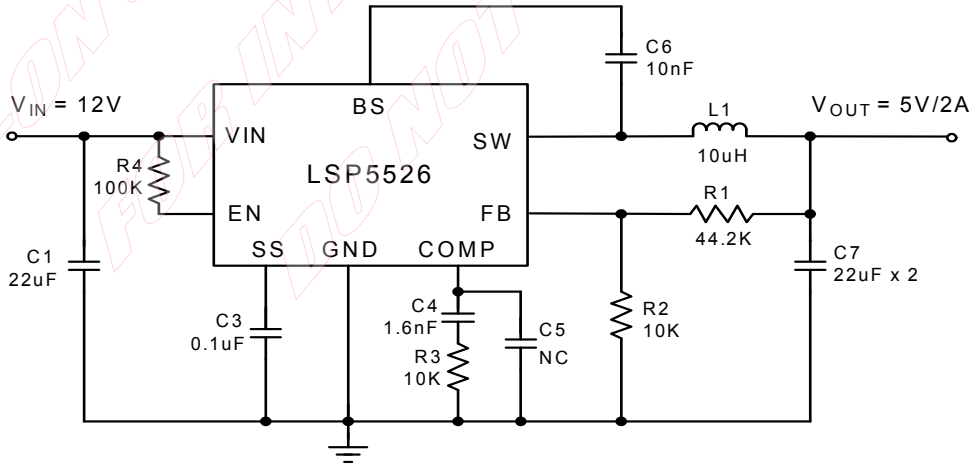

shows a sample LSP5526 application circuit generating 5V/2A output

Please be aware that an **Important Notice** concerning availability, disclaimers, and use in critical applications of LSC products is at the end of this document.

深圳市华升微电子有限公司 TEL：0755-3327219 33270812 FAX：0755-61174076 E-mail: hswdz01@163.com

Ordering Information

LSP5526-X X X

- **Output Voltage :** Blank : ADJ
- **Package :** S8 : SOP-8L
- **Packing :** A : Tape & Reel

Device	Package Code	Package	Tape & Reel	
			Quantity	Part Number Suffix
LSP5526-S8A	S8	SOP-8L	2500	A

Pin Assignments

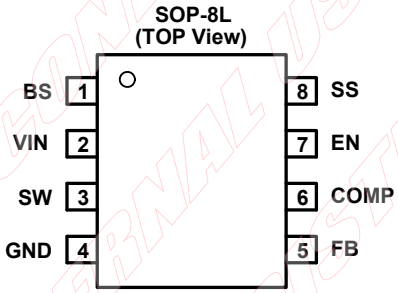

Pin Descriptions

Pin Number	Name	Description
1	BS	Bootstrap. This pin acts as the positive rail for the high-side switch's gate driver. Connect a 0.1uF capacitor between BS and SW.
2	VIN	Input Supply. Bypass this pin to G with a low ESR capacitor. See Input Capacitor in the Application Information section.
3	SW	Switch Output. Connect this pin to the switching end of the inductor.
4	GND	Ground.
5	FB	Feedback Input. The voltage at this pin is regulated to 0.925V. Connect to the resistor divider between output and ground to set output voltage.
6	COMP	Compensation Pin. See Stability Compensation in the Application Information section.
7	EN	Enable Input. When higher than 2.5V, this pin turns the IC on. When lower than 1.3V, this pin turns the IC off. Output voltage is discharged when the IC is off. This pin should not be left open.
8	SS	Soft-Start Control Input. SS controls the soft-start period. Connect a capacitor from SS to GND to set the soft-start period. A 0.1uF capacitor sets the soft-start period to 15ms. To disable the soft-start feature, leave SS unconnected.

LITE-ON SEMICONDUCTOR CORP. FOR INTERNAL USE ONLY NOT FOR DISTRIBUTE

Block Diagram

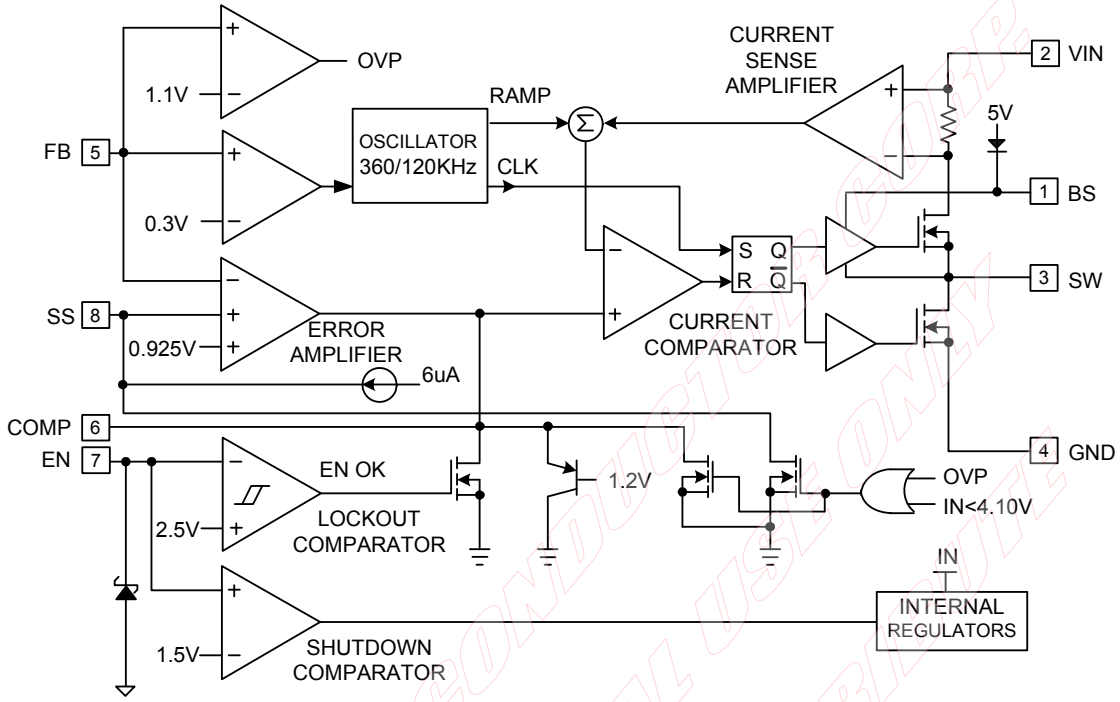

Absolute Maximum Ratings

Parameter	Value	Unit
Input Supply Voltage	-0.3 to 25	V
SW Voltage	-1 to V_{IN} + 0.3	V
BS Voltage	V_{SW} – 0.3 to V_{SW} + 6	V
EN, FB, COMP Voltage	-0.3 to 5.	V
Continuous SW Current	Internally limited	A
Junction to Ambient Thermal Resistance (θ_{JA}) (Test on Approximately 3 in^2 Copper Area 1oz copper FR4 board)	87	°C/W
Junction to Ambient Case Resistance (θ_{JC})	20	°C/W
SOP-8L Power Dissipation	0.76	W
Maximum Junction Temperature	150	°C
Storage Temperature Range	-65 to 150	°C

(Note: Exceeding these limits may damage the device. Exposure to absolute maximum rating conditions for long periods may affect device reliability.)

Recommended Operating Conditions

Parameter	Min	Max	Unit
Input Supply Voltage	4.5	23	V
Operating Junction Temperature	-20	+125	°C

LITEON SEMICONDUCTOR CORP. INTERNAL USE ONLY DO NOT DISTRIBUTE

Electrical Characteristics

(V_{IN} = 12V, T_A= 25°C unless otherwise specified.)

Parameter	Symbol	Test Conditions	Min	Typ	Max	Unit
Feedback Voltage	V_{FB}	4.5V ≤ V_{IN} ≤ 23V	0.900	0.925	0.950	V
Feedback Overvoltage Threshold				1.1		V
High-Side Switch-On Resistance				95		mΩ
Low-Side Switch-On Resistance				95		mΩ
High-Side Switch Leakage		V_{EN} = 0V, V_{SW} = 0V		0.1	10	uA
Upper Switch Current Limit				3.5	4.0	A
COMP to Current Limit Transconductance	G_{COMP}			3.3		A/V
Error Amplifier Transconductance	G_{EA}	ΔI_{COMP} = ±10uA		920		uA/V
Error Amplifier DC Gain	A_{VEA}			480		V/V
Switching Frequency	f_{SW}			340		KHz
Short Circuit Switching Frequency		V_{FB} = 0		120		KHz
Maximum Duty Cycle	D_{MAX}	V_{FB} = 0.8V		92		%
Minimum On Time				220		nS
EN Shutdown Threshold Voltage		V_{EN} Rising	1.1	1.4	2	V
EN Shutdown Threshold Voltage Hys-terisis				180		mV
EN Lockout Threshold Voltage			2.2	2.5	2.7	V
EN Lockout Hysterisis				130		mV
Supply Current in Shutdown		V_{EN} = 0		0.3	3.0	uA
IC Supply Current in Operation		V_{EN} = 3V, V_{FB} = 1.0V		1.3	1.5	mA
Input UVLO Threshold Rising	UVLO	V_{EN} Rising	3.80	4.05	4.40	V
Input UVLO Threshold Hysteresis				100		mV
Soft-start Current		V_{SS} = 0V		6		uA
Soft-start Period		C_{SS} = 0.1uF		15		mS
Thermal Shutdown Temperature		Hysteresis = 25°C		160		°C

LITE-ON CONFIDENTIAL FOR INTERNAL USE ONLY DO NOT DISTRIBUTE

Application Description

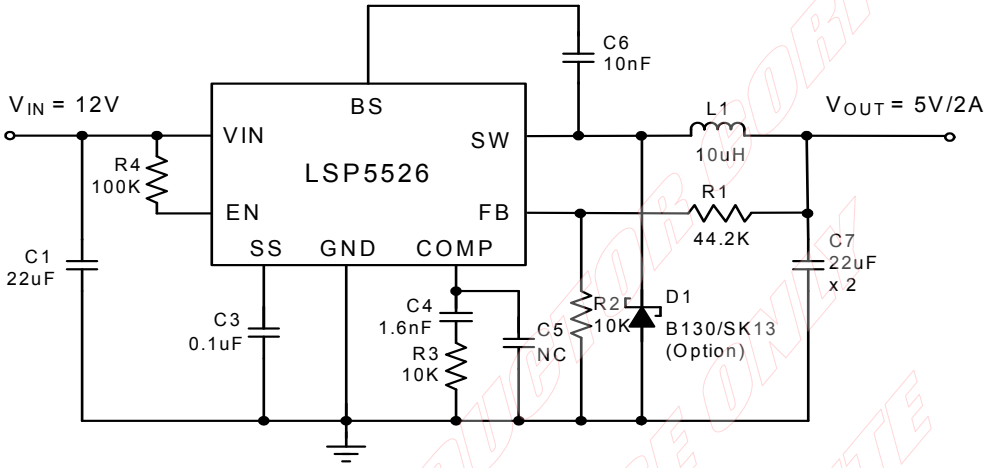

shows a sample LSP5526 application circuit generating 5V/2A output.

Output Voltage Setting

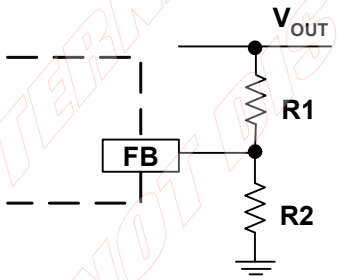

Figure1. Output Voltage Setting

Figure 1 shows the connections for setting the output voltage. Select the proper ratio of the two feedback resistors R_{FB1} and R_{FB2} based on the output voltage. Typically, use $R_{FB2} \approx 10K\Omega$ and determine R_{FB1} from the following equation:

LITE-ON SEMICONDUCTOR CORP. FOR INTERNAL USE ONLY DO NOT DISTRIBUTE

$$R_{FB1} = R_{FB2}\left(\frac{V_{OUT}}{0.925V} - 1\right) \quad (1)$$

Table1— Recommended Resistance Values

VOUT	RFB1	RFB2
1.0V	1.0 KΩ	12 KΩ
1.2V	3.0 KΩ	10 KΩ
1.8V	9.53 KΩ	10 KΩ
2.5V	16.9 KΩ	10 KΩ
3.3V	26.1 KΩ	10 KΩ
5V	44.2 KΩ	10 KΩ
12V	121 KΩ	10 KΩ

Inductor Selection

The inductor maintains a continuous current to the output load. This inductor current has a ripple that is dependent on the inductance value: higher inductance reduces the peak-to-peak ripple current. The trade off for high inductance value is the increase in inductor core size and series resistance, and the reduction in current handling capability. In general, select an inductance value L based on the ripple current requirement:

$$L = \frac{V_{OUT} \bullet (V_{IN} - V_{OUT})}{V_{IN} f_{SW} I_{OUTMAX} K_{RIPPLE}} \quad (2)$$

where V_{IN} is the input voltage, V_{OUT} is the output voltage, f_{SW} is the switching frequency, I_{OUTMAX} is the maximum output current, and K_{RIPPLE} is the ripple factor. Typically, choose K_{RIPPLE} = 30% to correspond to the peak-to-peak ripple current being 30% of the maximum output current.
With this inductor value, the peak inductor current is I_{OUT} • (1 + K_{RIPPLE} / 2). Make sure that this peak inductor current is less that the 3A current limit. Finally, select the inductor core size so that it does not saturate at 3A. Typical inductor values for various output voltages are shown in Table 1.

V_{OUT}	1.0V	1.2V	1.5V	1.8V	2.5V	3.3V	5V	9V
L	10uH	10uH	10uH	10uH	10uH	10uH	10uH	33uH

Table 1. Typical Inductor Values

Input Capacitor

The input capacitor needs to be carefully selected to maintain sufficiently low ripple at the supply input of the converter. A low ESR capacitor is highly recommended. Since large current flows in and out of this capacitor during switching, its ESR also affects efficiency.
The input capacitance needs to be higher than 10uF. The best choice is the ceramic type; however, low ESR tantalum or electrolytic types may also be used provided that the RMS ripple current rating is higher than 50% of the output current. The input capacitor should be placed close to the VIN and GND pins of the IC, with the shortest traces possible. In the case of tantalum or electrolytic types, they can be further away if a small parallel 0.1uF ceramic capacitor is placed right next to the IC.

Output Capacitor

The output capacitor also needs to have low ESR to keep low output voltage ripple. The output ripple voltage is:

$$V_{RIPPLE} = I_{OUTMAX} K_{RIPPLE} R_{ESR} + \frac{V_{IN}}{28 \bullet f_{SW}^{2} LC_{OUT}} \quad (3)$$

where I_{OUTMAX} is the maximum output current, K_{RIPPLE} is the ripple factor, R_{ESR} is the ESR of the output capacitor, f_{SW} is the switching frequency, L is the inductor value, and C_{OUT} is the output capacitance. In the case of ceramic output capacitors, R_{ESR} is very small and does not contribute to the ripple. Therefore, a lower capacitance value can be used for ceramic capacitors. In the case of tantalum or electrolytic capacitors, the ripple is dominated by R_{ESR} multiplied by the ripple current. In that case, the output capacitor is chosen to have sufficiently low ESR.

For ceramic output capacitors, typically choose a capacitance of about 22uF. For tantalum or electrolytic capacitors, choose a capacitor with less than 50mΩ ESR.

Optional Schottky Diode

During the transition between high-side switch and low-side switch, the body diode of the low side power MOSFET conducts the inductor current. The forward voltage of this body diode is high. An optional Schottky diode may be paralleled between the SW pin and GND pin to improve overall efficiency. Table 2 lists example Schottky diodes and their Manufacturers.

Table 2—Diode Selection Guide

Part Number	Voltage/Current Rating	Vendor
B130	30V, 1A	Lite-on semiconductor corp.
SK13	30V, 1A	Lite-on semiconductor corp.

Stability Compensation

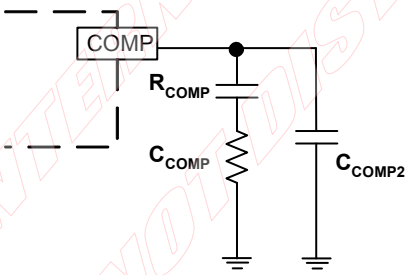

C_{COMP2} is needed only for high ESR output capacitor

Figure 2. Stability Compensation

The feedback loop of the IC is stabilized by the components at the COMP pin, as shown in Figure 2. The DC loop gain of the system is determined by the following equation:

$$A_{VDC} = \frac{0.925V}{I_{OUT}} A_{VEA} G_{CS} \quad (4)$$

The dominant pole P1 is due to C_{COMP}:

$$f_{P1} = \frac{G_{EA}}{2\pi A_{VEA} C_{COMP}} \quad (5)$$

The second pole P2 is the output pole:

LITE-ON SEMICONDUCTOR CORP. FOR INTERNAL USE ONLY DO NOT DISTRIBUTE

$$f_{P2} = \frac{I_{OUT}}{2\pi V_{OUT} C_{OUT}} \quad (6)$$

The first zero Z1 is due to R_{COMP} and C_{COMP}:

$$f_{Z1} = \frac{1}{2\pi R_{COMP} C_{COMP}} \quad (7)$$

And finally, the third pole is due to R_{COMP} and C_{COMP2} (if C_{COMP2} is used):

$$f_{P3} = \frac{1}{2\pi R_{COMP} C_{COMP2}} \quad (8)$$

The following steps should be used to compensate the IC:

STEP1. Set the crossover frequency at 1/10 of the switching frequency via R_{COMP}:

$$R_{COMP} = \frac{2\pi V_{OUT} C_{OUT} f_{SW}}{10 G_{EA} G_{CS} \bullet 0.925V} \quad (9)$$

but limit R_{COMP} to 10KΩ maximum.

STEP2. Set the zero fZ1 at 1/4 of the crossover frequency. If R_{COMP} is less than 10KΩ, the equation for C_{COMP} is:

$$C_{COMP} = \frac{1.68 \times 10^{-5}}{R_{COMP}} (F) \quad (10)$$

If R_{COMP} is limited to 10KΩ, then the actual crossover frequency is 10/ ($V_{OUT}C_{OUT}$). Therefore:

$$C_{COMP} = 1.66 \times 10^{-11} V_{OUT} C_{OUT} (F) \quad (11)$$

STEP3. If the output capacitor's ESR is high enough to cause a zero at lower than 4 times the crossover frequency, an additional compensation capacitor C_{COMP2} is required. The condition for using C_{COMP2} is:

$$8\pi Cout \bullet R_{ESR} \bullet f_C \geq 1 \quad (12)$$

And the proper value for C_{COMP2} is:

$$C_{COMP2} = \frac{C_{OUT} R_{ESRCOUT}}{R_{COMP}} \quad (13)$$

LITEON SEMICONDUCTOR CORP. FOR INTERNAL USE ONLY DO NOT DISTRIBUTE

A reference table as follows:

Table 3— Component Selection Guide for Stability Compensation

Vin Range (V)	Vout (V)	Cout	Rcomp (R3) (kΩ)	Ccomp (C4) (nF)	Ccomp2 (C5) (pF)	Inductor (uH)
5 – 12	1.0	22uF x2 Ceramic	10	3.6	none	4.7
5 - 12	1.2		10	3.6	none	4.7
5 - 19	1.8		10	2.2	none	10
5 - 24	2.5		10	1.8	none	10
5 - 24	3.3		10	1.5	none	10
5 - 24	5		14	1.5	none	10
5 - 12	1.0	470uF/ 6.3V/ 120mΩ	10	6.8	680	4.7
5 - 12	1.2					
5 - 19	1.8					10
5 - 23	2.5					
5 - 23	3.3					
5 - 23	5					

LITE-ON SEMICONDUCTOR CORP.
FOR INTERNAL USE ONLY
DO NOT DISTRIBUTE

Typical Performance Characteristics

Start up soft start V_{IN}=12V, V_{OUT}=5V I_{OUT}=2A

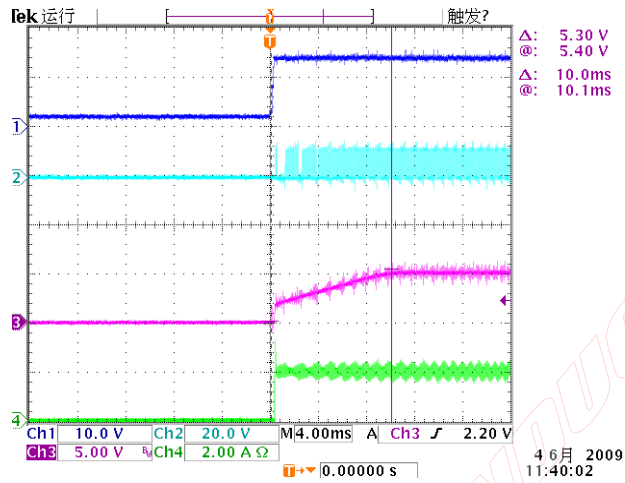

Operating status V_{IN}=12V, V_{OUT}=5V I_{OUT}=2A

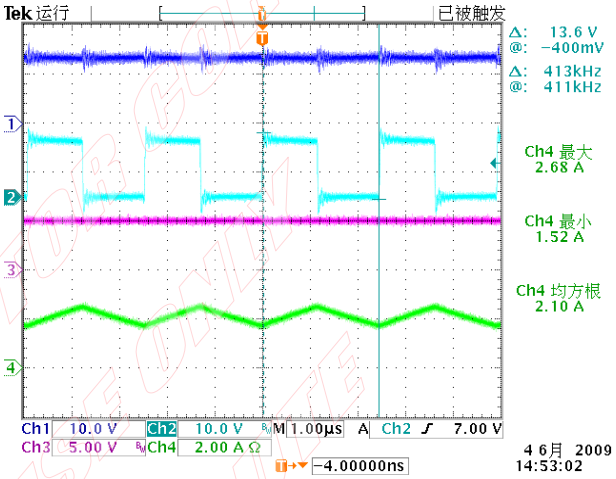

$12V_{IN}$ $5.0V_{OUT}$ Efficiency curve

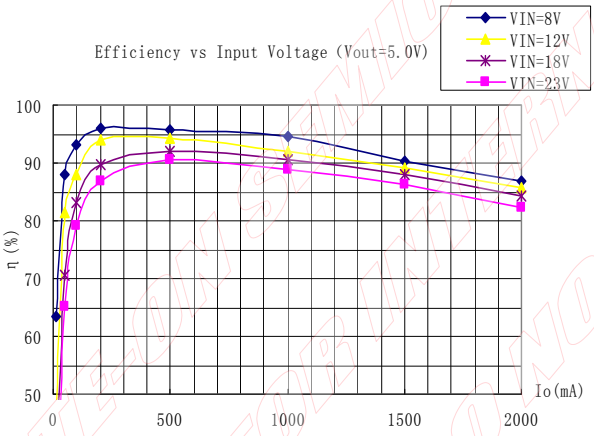

$12V_{IN}$ $1.0V_{OUT}$ Efficiency curve

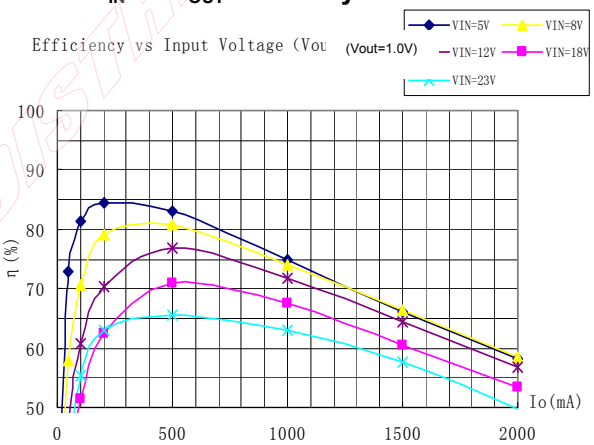

LITE-ON SEMICONDUCTOR CORP. FOR INTERNAL USE ONLY DO NOT DISTRIBUTE

Marking Information

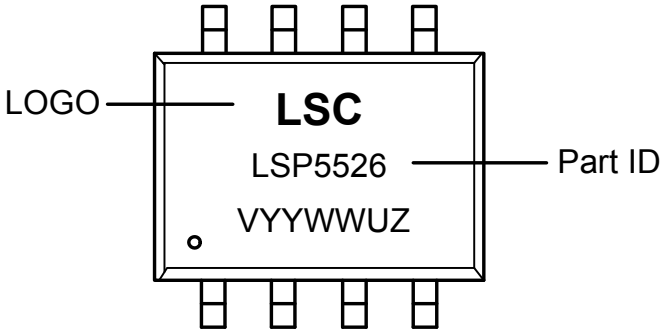

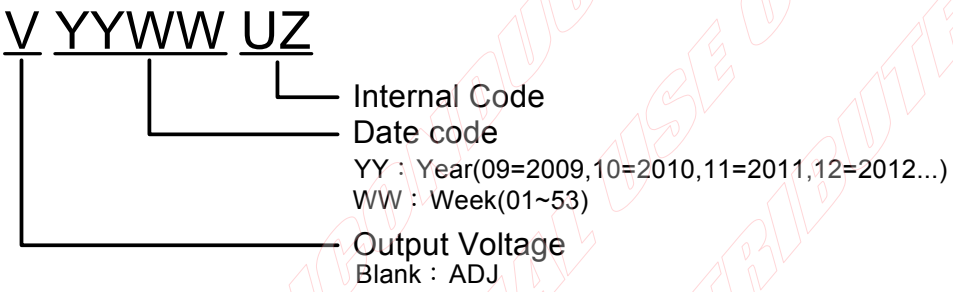

LITE-ON SEMICONDUCTOR CORP.
FOR INTERNAL USE ONLY
DO NOT DISTRIBUTE

Package Information (All Dimensions in min)

SOP-8L

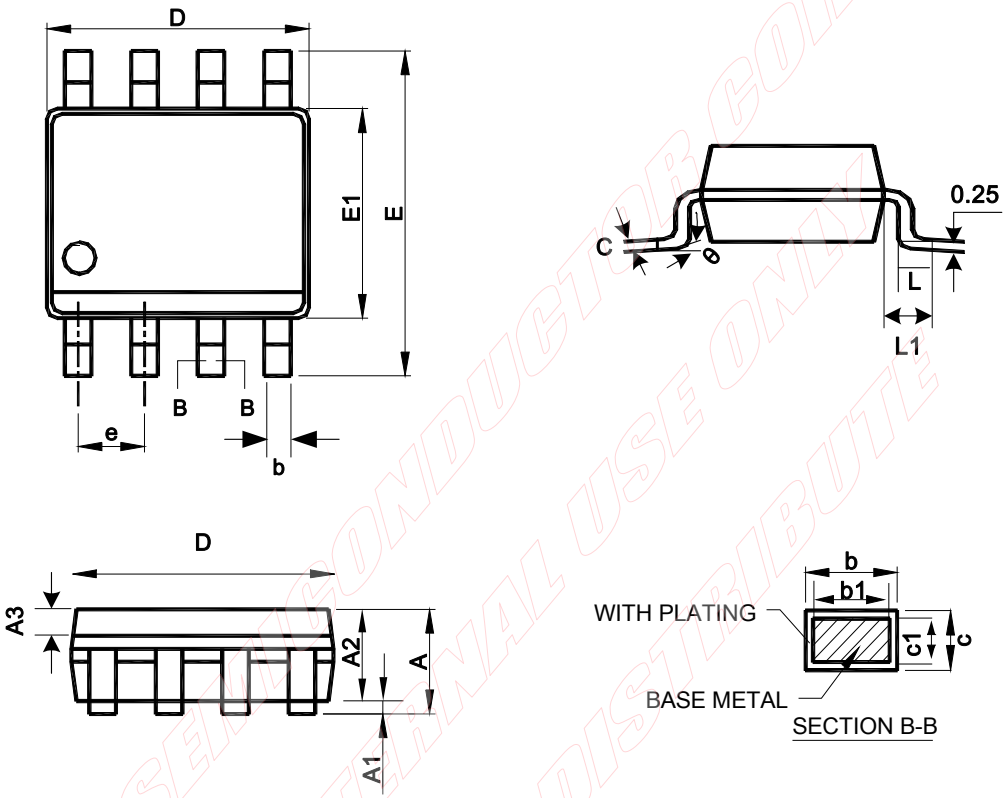

Symbol	Dimensions In Millimeters		
	Min	Nom	Max
A	-	-	1.75
A1	0.10	-	0.25
A2	1.30	1.40	1.50
A3	0.60	0.65	0.70
b	0.39	-	0.48
b1	0.38	0.41	0.43
c	0.21	-	0.26
c1	0.19	0.20	0.21
D	4.70	4.90	5.10
E	5.80	6.00	6.20
E1	3.70	3.90	4.10
e	1.27BSC		
L	0.50	-	0.80
L1	1.05BSC		
θ	0	-	8°

LITE-ON SEMICONDUCTOR CORP. FOR INTERNAL USE ONLY DO NOT DISTRIBUTE