TOUCH DIMMER FOR LED LIGHTING

GENERAL DESCRIPTION

The TTP110 is a touch detector IC for the LED lightings. The dimmer function controls by PWM output. It has high frequency for PWM output.

FEATURES

- Operating voltage 5.0VV
- Operating current @VDD=5.0V,25℃ no load, <300uA
- Higher frequency PWM output.
- Support two option pin to select 4 type dimmer modes.
  (1). 3 steps dimmer initial OFF. OPT2=0, OPT1=1
  (2). 4 steps dimmer initial OFF. OPT2=1, OPT1=0
  (3). 3 steps dimmer initial ON (6%). OPT2=0, OPT1=0
  (4). toggle ON OFF initial OFF. OPT2=1, OPT1=1

- PWM output control **PMOS.**
- Two input dimmer modes: touch plate and switch
- Use the circuit simple and easily.
- Long wire to connect the IC to touch sensor.

APPLICATION

- LED LAMP
- For PWM control input

BLOCK DIAGRAM

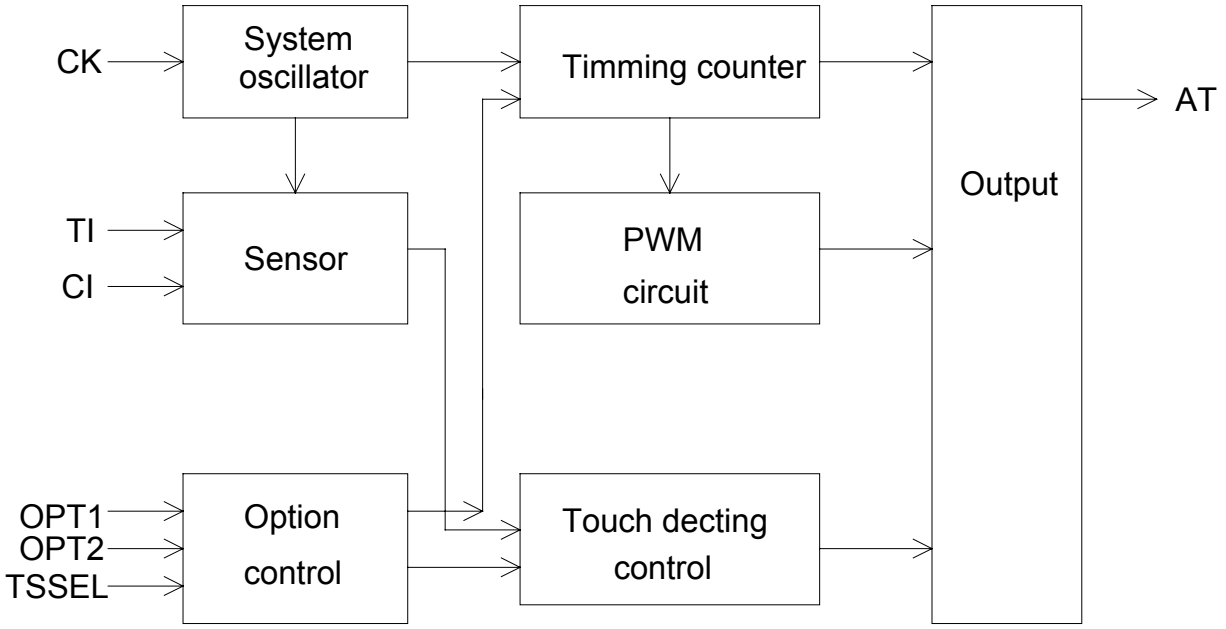

PAD DESCRIPTION

Pad No.	Pad Name	I/O Type	Pad Description
1	CK	I	System clock input pin
2	VDD	P	Positive power supply
3	TI	I	Touch input
4	CI	I	Sensor control input
5	OPT2	I-PL	Mode select
6	TSSEL	I-PH	Touch switch mode Selection : 1(Default)=> touch mode; 0=>switch mode
7	VSS	P	Negative power supply, ground
8	OPT1	I-PH	Mode select
9	AT	O	Output pin control PMOS active low

Pin Type

I	CMOS input only
O	CMOS output
I-PH	CMOS input and pull-high resister
I-PL	CMOS input and pull-low resister
P	Power / Ground

ELECTRICAL CHARACTERISTICS

• Absolute Maximum Ratings

Parameter	Symbol	Conditions	Value	Unit
Operating Temperature	T_{OP}	—	-20 ~ +70	℃
Storage Temperature	T_{STG}	—	-50 ~ +125	℃
Power Supply Voltage	VDD	Ta=25°C	VSS-0.3 ~ VSS+5.5	V
Input Voltage	V_{IN}	Ta=25°C	VSS-0.3 ~ VDD+0.3	V
Human Body Mode	ESD	—	4	KV
Note：VSS symbolizes for system ground				

• DC/AC Characteristics：(Test condition at room temperature=25℃)

Parameter	Symbol	Test Condition		Min.	Typ.	Max.	Unit
Operating Voltage	VDD				5.0		V
System oscillator	F	VDD=5.0V		-	532K	-	Hz
Operating Current	I_{OP}	VDD=5.0V No load touch mode		-	120	300	uA
		VDD=5.0V No load Switch mode			50	120	
Input Ports	V_{IL}	Input Low Voltage		0	-	0.2	VDD
Input Ports	V_{IH}	Input High Voltage		0.8	-	1.0	VDD
Output Port Sink Current	I_{OL}	VDD=5.0V, V_{OL}=0.5V		-	25	-	mA
Output Port Source Current	I_{OH}	VDD=5.0V, V_{OH}=VDD-0.5V		-	8	-	mA
Input Pin Pull-high Resistor	R_{PL}	VDD=5.0V, Pin: OPT2			85K		Ohm
Input Pin Pull-low Resistor	R_{PH}	VDD=5.0V, Pin : TSSEL			300K		ohm
		VDD=5.0V, Pin : OPT1			130K		

FUNCTION DESCRIPTION

1. **Support 2 kinds of package item :**
   TTP110A: Touch dim mode TSSEL=1.
   TTP110B: Switch dim mode TSSEL=0.

2. **Touch (switch) mode select for OPT2 and OPT1**
   a. OPT2=0, OPT1=1 : 3 step dimmer

      OFF → Night → Medium → High→ OFF….

   b. OPT2=1, OPT1=0 : 4 step dimmer

      OFF → Night→ Mood → Medium → High→ OFF….

   c. OPT2=0, OPT1=0 : 3 step dimmer "initial ON"

      Night → Medium → High→ OFF→ Night…

   d. OPT2=1, OPT1=1 : ON / OFF
      OFF→ High→ OFF….

3.PWM duty rate(Low Enable) for PMOS turns ON.

Step	PWM Duty Rate Active High
Night	**6%**
Mood	**28%**
Medium	**49%(3 step) / 60%(4 setp)**
High	**99%**

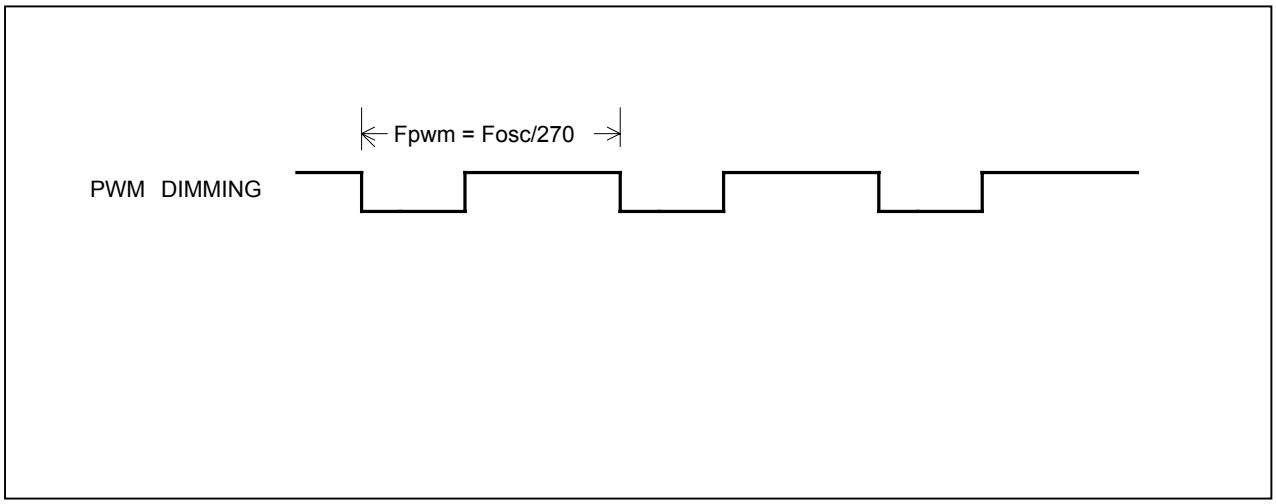

APPLICATION CIRCUIT

USB 5V

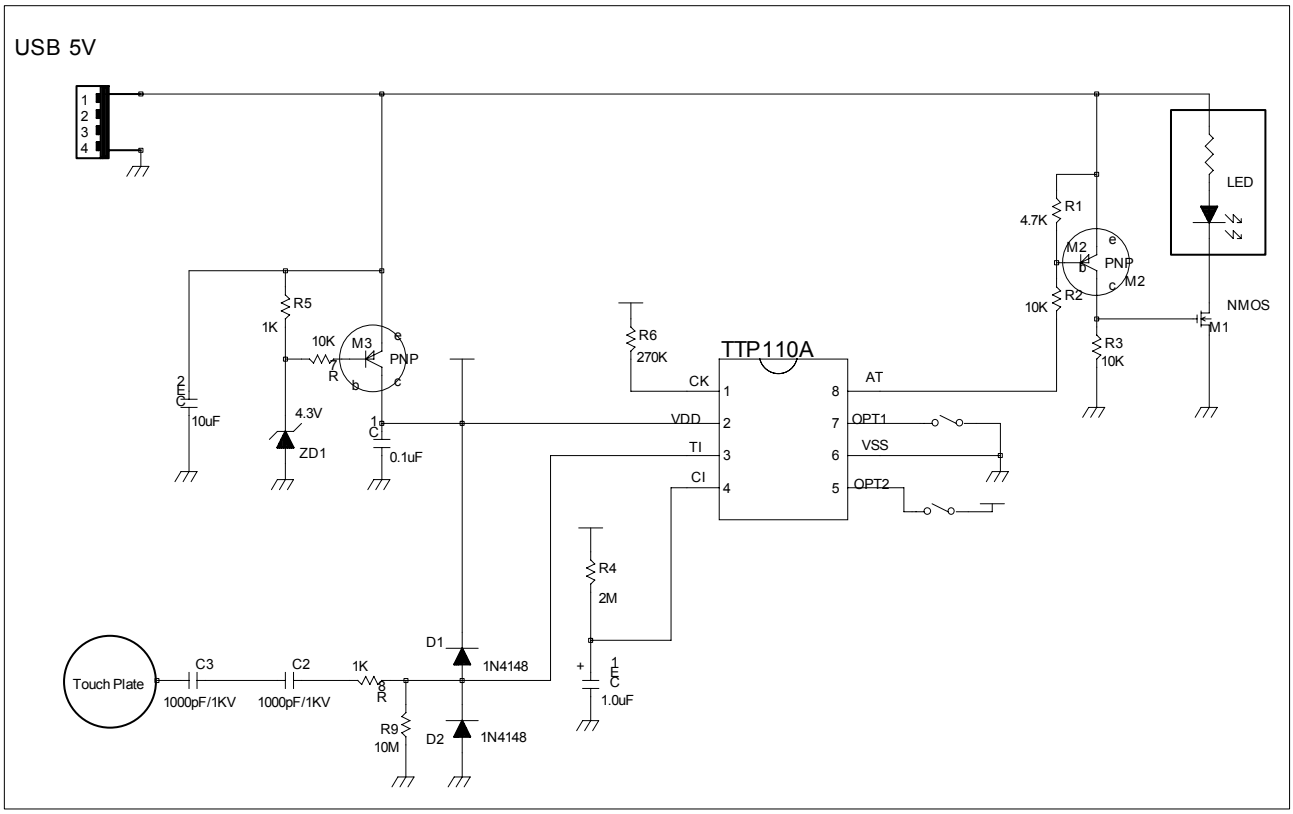

USB 5V For PNP9012

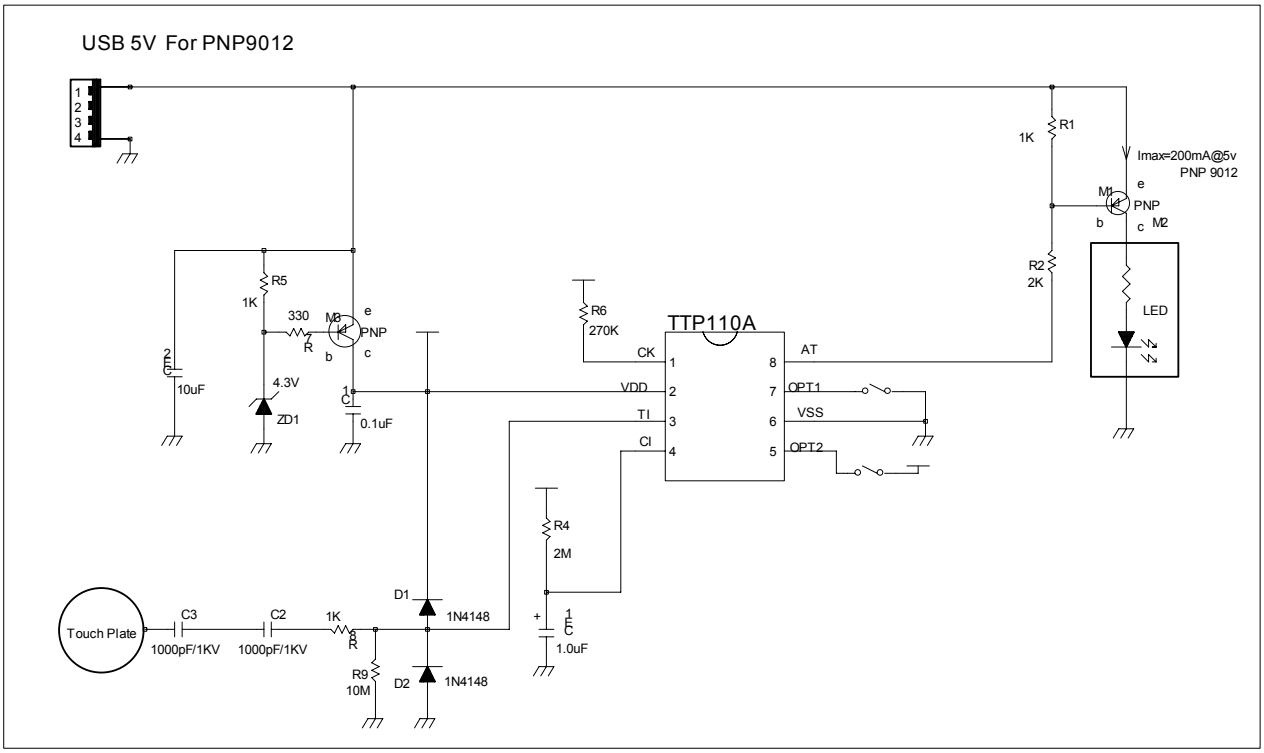

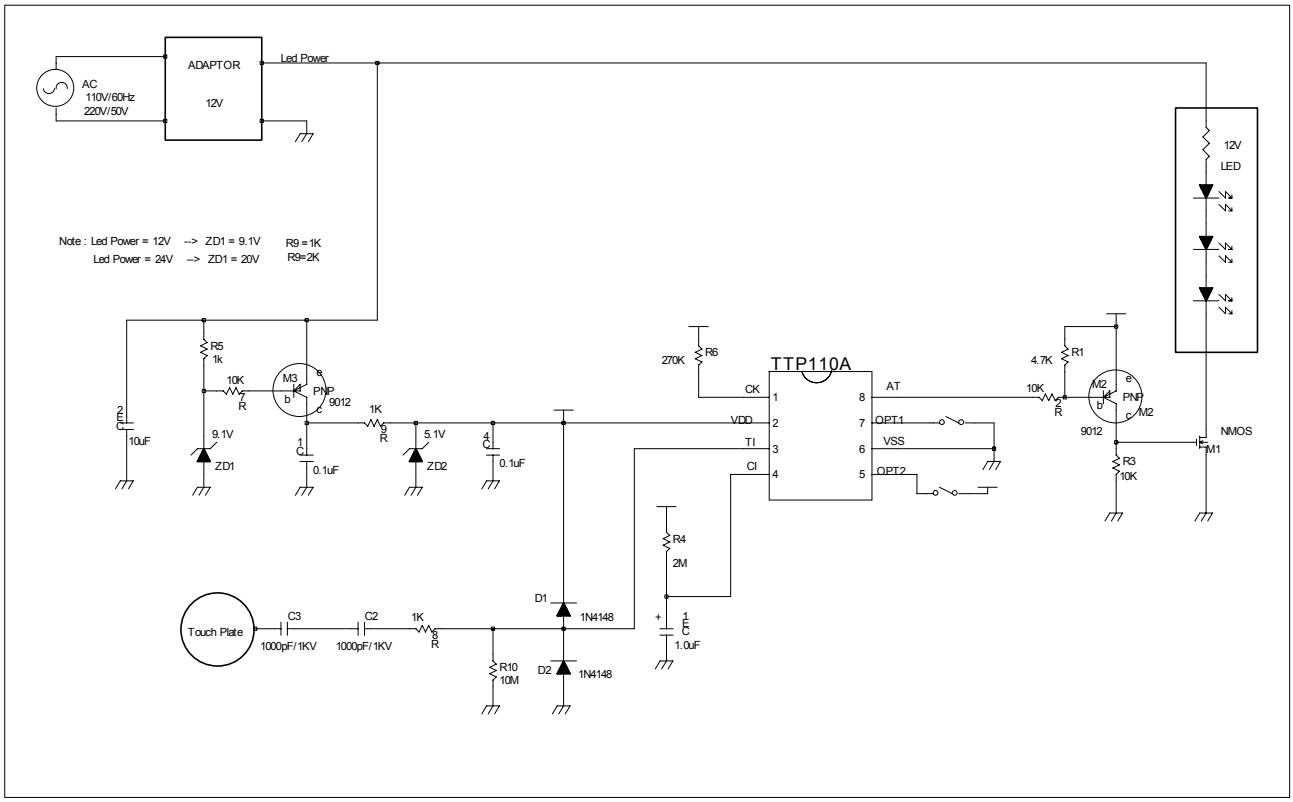
ADAPTOR
12V
AC
110V/60Hz
220V/50V
Led Power
12V
LED
Note : Led Power = 12V --> ZD1 = 9.1V
Led Power = 24V --> ZD1 = 20V
R9 = 1K
R9=2K
R5
1k
10K
M3
PNP
9012
1K
5.1V
ZD2
0.1uF
9.1V
ZD1
10uF
270K
R6
TTP110A
CK
VDD
TI
CI
AT
OPT1
VSS
OPT2
4.7K
R1
M2
NMOS
M1
R3
10K
R4
2M
1.0uF
D1
1N4148
D2
1N4148
R10
10M
Touch Plate
C3
1000pF/1KV
C2
1000pF/1KV

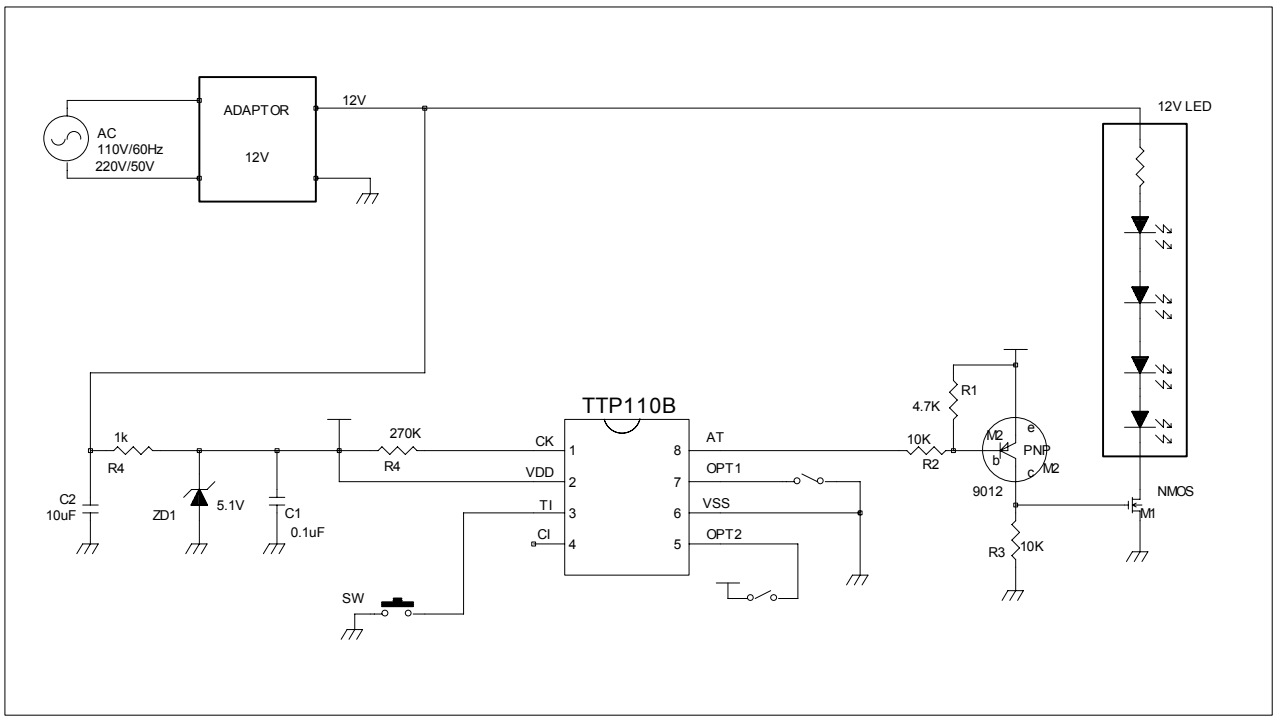
ADAPTOR
12V
AC
110V/60Hz
220V/50V
12V LED
TTP110B
1k
R4
270K
R4
CK
VDD
TI
CI
AT
OPT1
VSS
OPT2
4.7K
R1
10K
R2
M2
PNP
9012
NMOS
M1
R3
10K
C2
10uF
ZD1
5.1V
C1
0.1uF
SW

PACKAGE LIST

ITEM	DESCRIPTION
TTP110A	Touch dim mode
TTP110B	Switch dim mode

Option Table List

Option pin		
OPT2	OPT1	DESCRIPTION
0	1	3 steps dimmer initial OFF
1	0	4 steps dimmer initial OFF
0	0	3 steps dimmer initial ON (6% Night)
1	1	OFF/ON (High 99%)

PACKAGE CONFIGURATION:

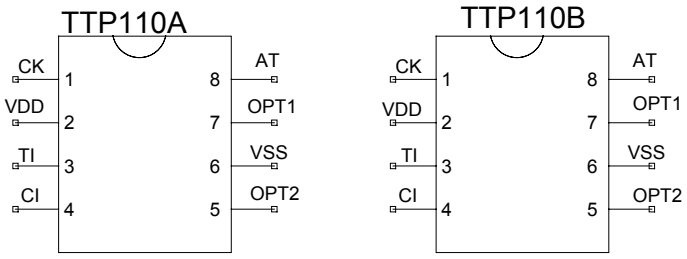

PACKAGE OUTLINE:

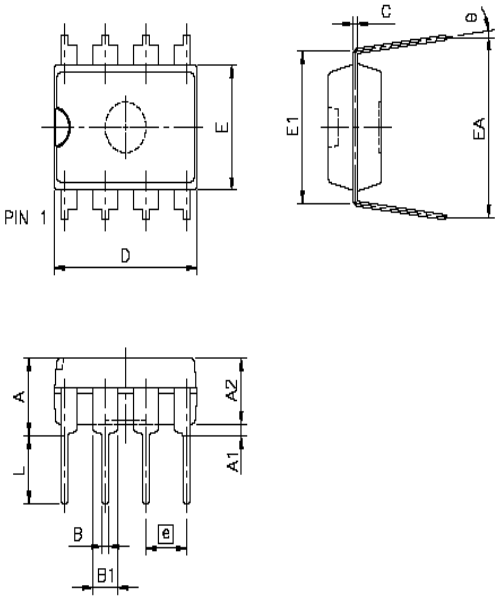

SYMBOL	DIMENSION IN INCH	DIMENSION IN MM
A	0.170 MAX.	4.318 MAX.
A1	0.015 MIN.	0.381 MIN.
A2	0.130±0.005	3.302±0.127
B	0.018 TYP.	0.457 TYP.
B1	0.060 TYP.	1.524 TYP.
C	0.010 NOM.	0.254 NOM.
D	0.362±0.005	9.195±0.127
E	0.252±0.005	6.401±0.127
E1	0.300±0.010	7.62±0.254
EA	0.355±0.020	9.017±0.508
e	0.100 TYP.	2.540 TYP.
L	0.130±0.010	3.302±0.254
θ	0°~15°	0°~15°

NOTE:
1.DIMENSION D & E DOES NOT INCLUDE FLASH.

